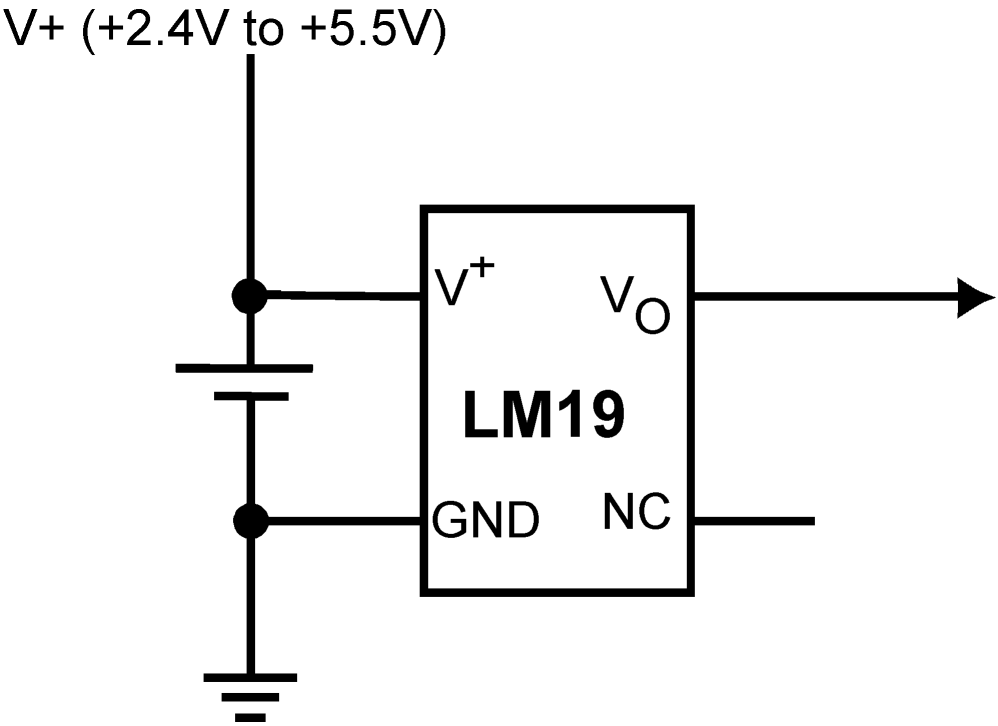
V+ (+2.4V to +5.5V)
V+
VO
LM19
GND
NC