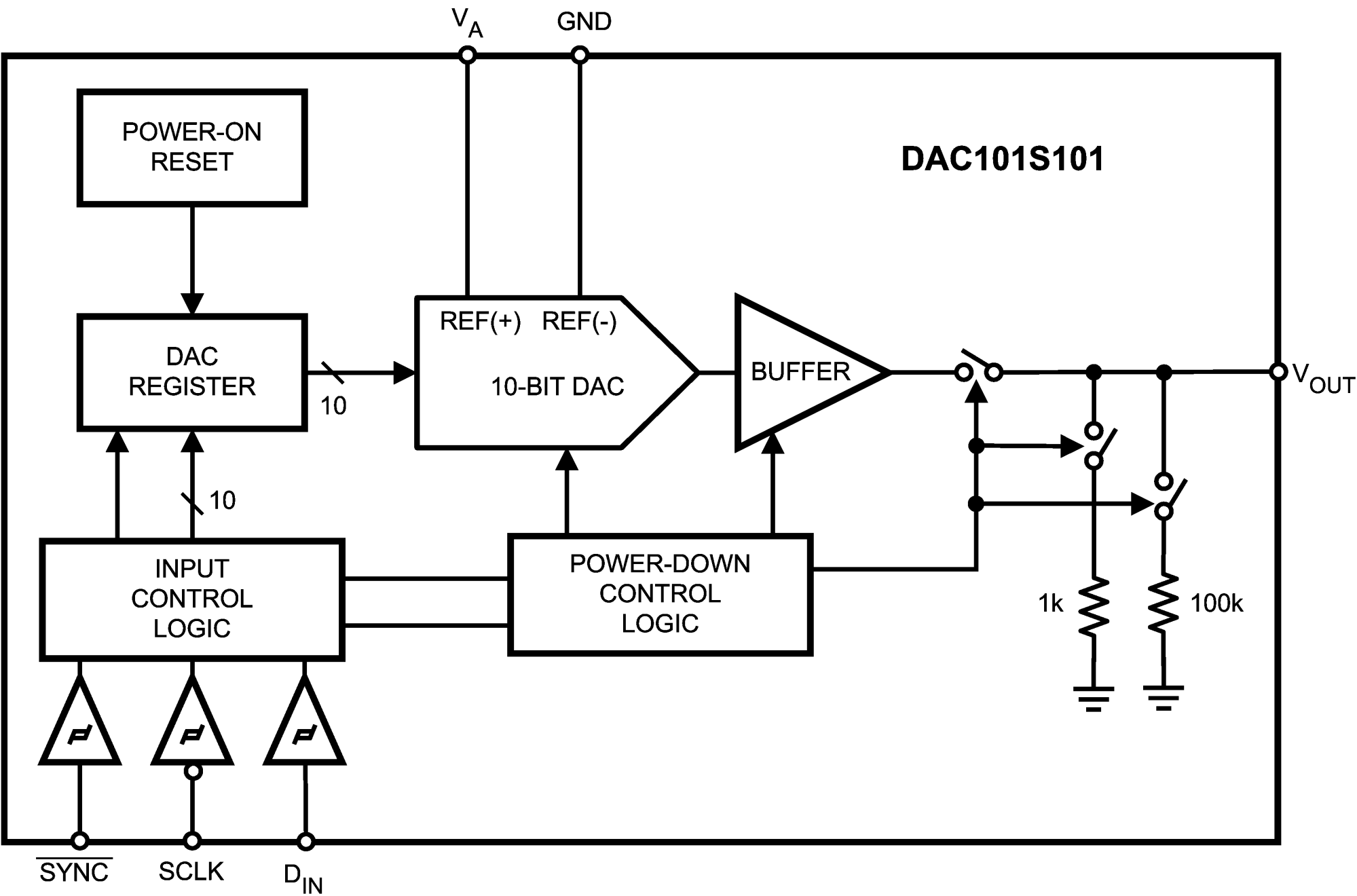
V_A
GND
DAC101S101
POWER-ON RESET
DAC REGISTER
10
REF(+) REF(-)
10-BIT DAC
BUFFER
V_OUT
10
INPUT CONTROL LOGIC
POWER-DOWN CONTROL LOGIC
1k
100k
SYNC
SCLK
D_IN