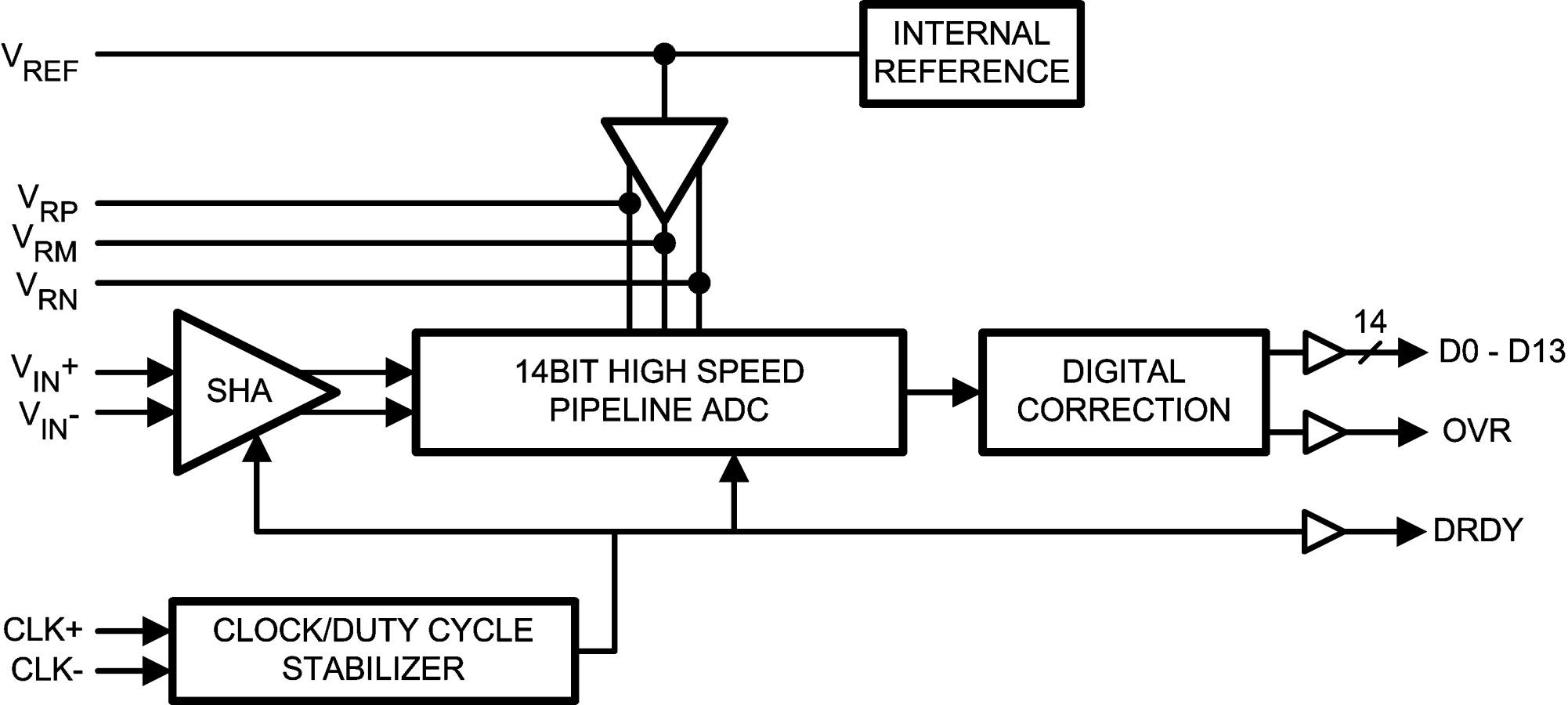
INTERNAL REFERENCE
VREF
VRP
VRM
VRN
VIN+
VIN-
SHA
14BIT HIGH SPEED PIPELINE ADC
DIGITAL CORRECTION
14
D0 - D13
OVR
DRDY
CLK+
CLK-
CLOCK/DUTY CYCLE STABILIZER