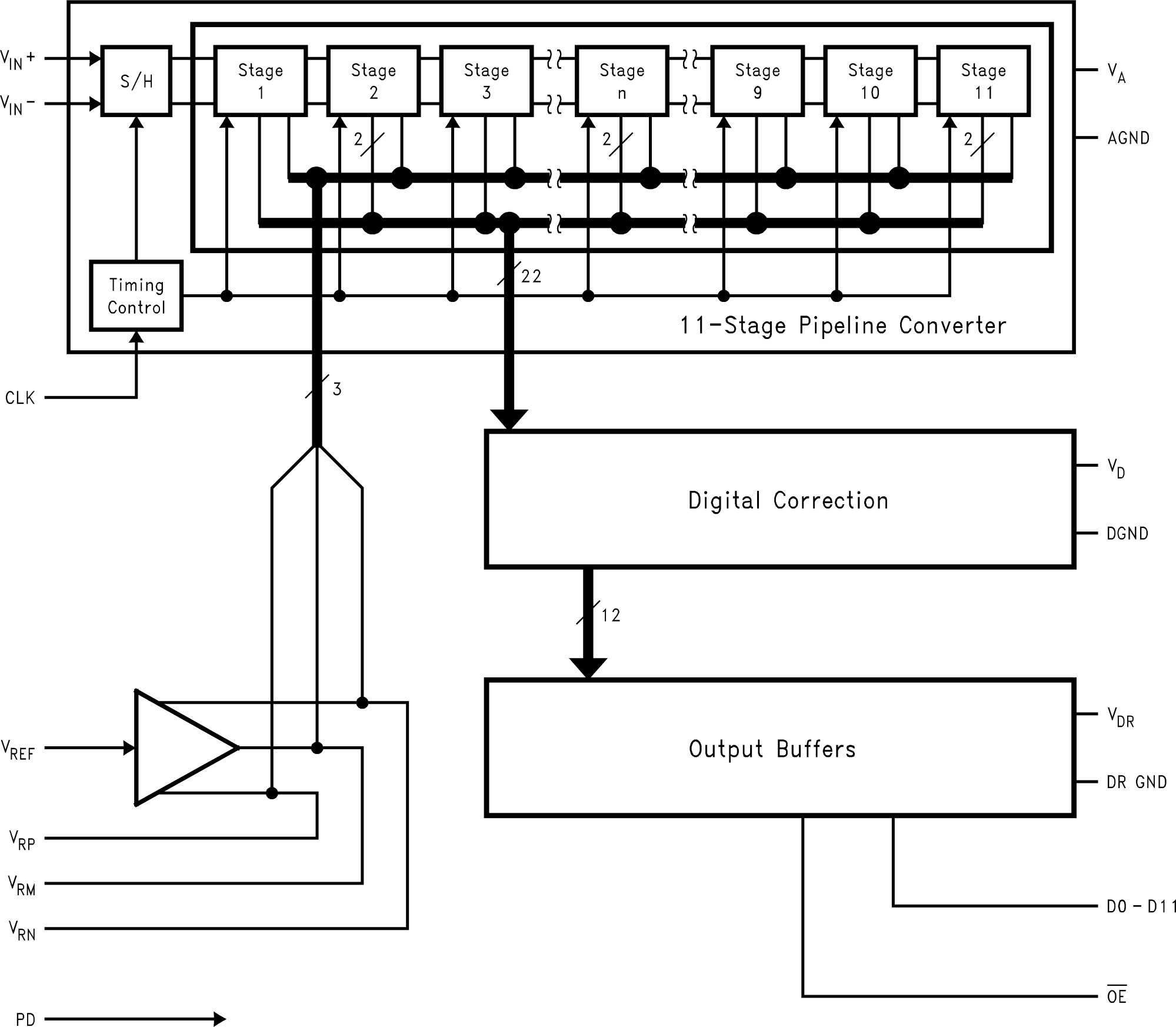
VIN+
VIN−
S/H
Stage 1
Stage 2
Stage 3
Stage n
Stage 9
Stage 10
Stage 11
VA
AGND
2
22
Timing Control
11-Stage Pipeline Converter
CLK
3
Digital Correction
VD
DGND
12
Output Buffers
VDR
DR GND
VREF
VRP
VRM
VRN
D0 – D11
OE
PD