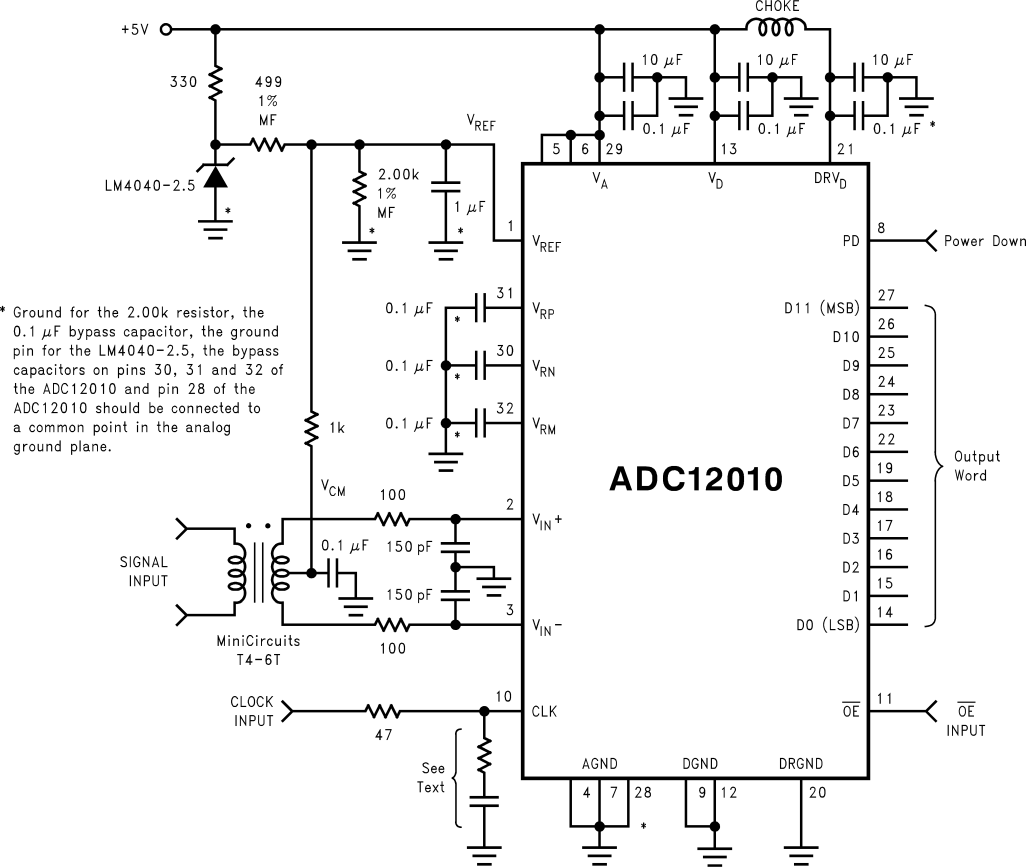
+5V
CHOKE
330
499
1%
MF
LM4040-2.5
2.00k
1%
MF
1 μF
VREF
10 μF
0.1 μF
5
6
29
13
21
VA
VD
DRVD
1
VREF
PD
8
Power Down
* Ground for the 2.00k resistor, the 0.1 μF bypass capacitor, the ground pin for the LM4040-2.5, the bypass capacitors on pins 30, 31 and 32 of the ADC12010 and pin 28 of the ADC12010 should be connected to a common point in the analog ground plane.
0.1 μF
31
VRP
30
VRN
32
VRM
1k
VCM
100
2
VIN+
0.1 μF
150 pF
SIGNAL
INPUT
MiniCircuits
T4-6T
3
VIN−
ADC12010
D11 (MSB)
D10
D9
D8
D7
D6
D5
D4
D3
D2
D1
D0 (LSB)
27
26
25
24
23
22
19
18
17
16
15
14
Output
Word
CLOCK
INPUT
47
10
CLK
OE
11
OE
INPUT
See
Text
AGND
DGND
DRGND
4
7
28
9
12
20