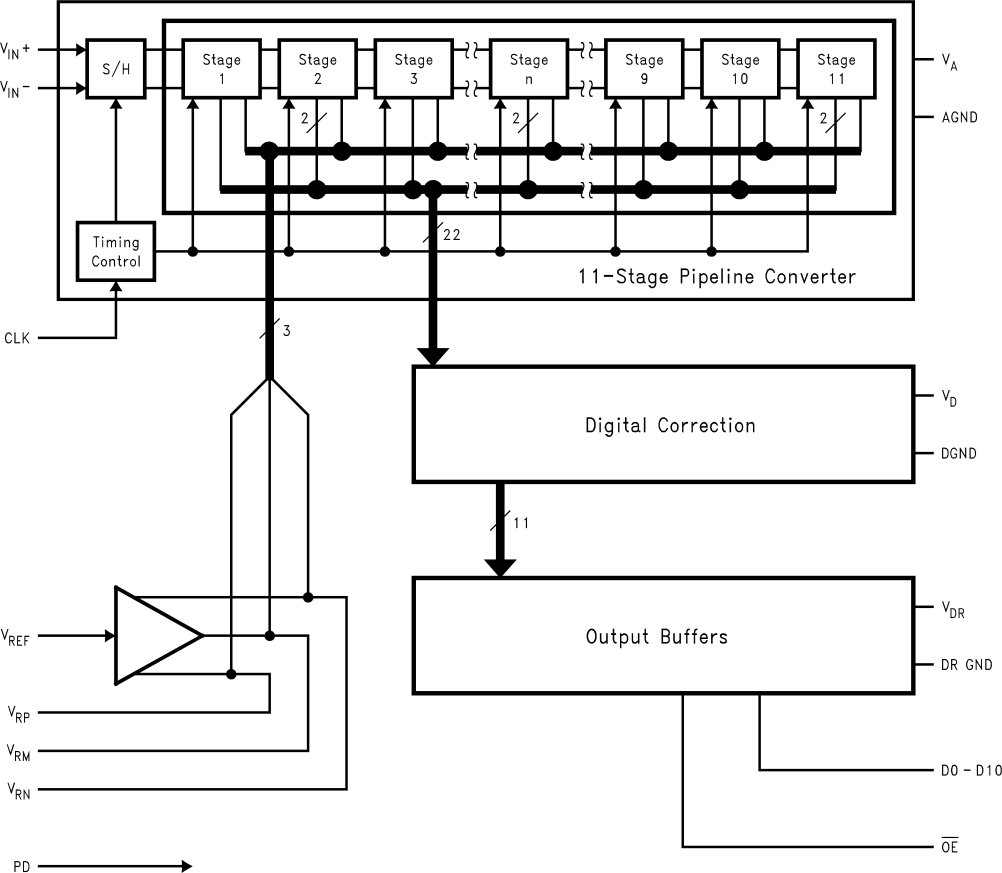
VIN+
VIN−
S/H
Stage 1
Stage 2
Stage 3
Stage n
Stage 9
Stage 10
Stage 11
VA
AGND
2
2
2
Timing Control
22
11-Stage Pipeline Converter
CLK
3
Digital Correction
VD
DGND
11
Output Buffers
VDR
DR GND
VREF
VRP
VRM
VRN
D0 – D10
OE
PD