National Semiconductor

Dec. 19, 2007
Rev - 1.0
CMC

Evaluation Board User's Guide

DAC121C08XEB, DAC101C08XEB, DAC081C08XEB
Micro Power Digital-to-Analog Converter (DAC) with an I^{2}C-Compatible Interface

12-bit	10-bit	8-bit
DAC121C085/ DAC121C081	DAC101C085/ DAC101C081	DAC081C085/ DAC081C081

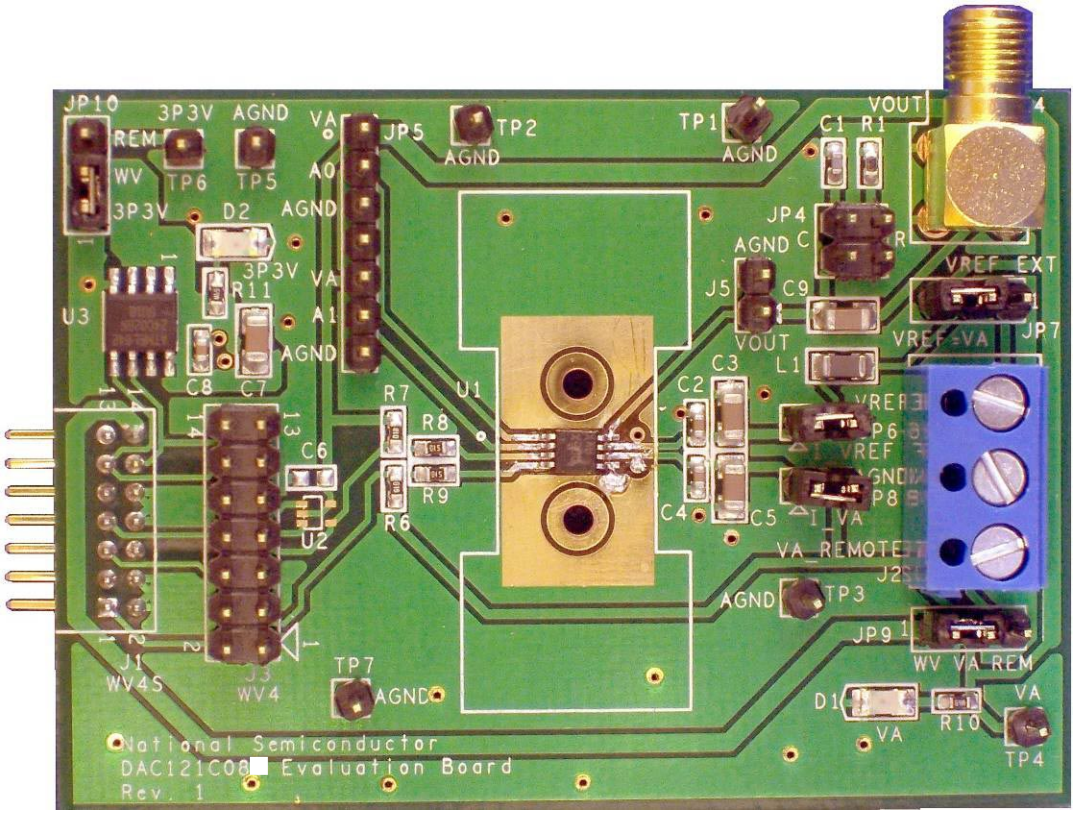

Table of Contents

1.0 Introduction 3

2.0 Board Assembly 4

3.0 Quick Start 4

3.1 Stand-Alone Mode 4

3.2 Computer Mode 5

4.0 Functional Description 6

4.1 Jumper Settings 6

4.2 I^2C Interface 6

4.3 DAC Reference Circuitry 6

4.4 Analog Output 7

4.5 Power Supply Connections 7

5.0 Software Operation and Settings 8

6.0 Evaluation Board Specifications 9

7.0 Hardware Schematic 10

8.0 Evaluation Board Bill of Materials 11

A1.0 Summary Tables of Test Points, Jumpers, and Connectors 12

1.0 Introduction

The DAC121C08XEB Design Kit (consisting of the DAC Evaluation Board and this User's Guide) is designed to ease evaluation and design-in of National Semiconductor's DAC121C081/DAC121C085 family of Digital-to-Analog Converters (DACs). The Micro-Power DACs feature Rail-to-Rail Output and an I^2C-Compatible interface. This User's Guide supports all three resolutions of the DAC family. The evaluation board comes with the full-featured MSOP-8 version of the DAC. For the 12-bit resolution, the DAC121C085 is used. For the 10-bit resolution, the DAC101C085 is used. For the 8-bit resolution, the DAC081C085 is used. All the devices in the family (DAC121C085, DAC101C085, and DAC081C085) will be referred to as the DAC121C085 in this document.

The evaluation board can be used in either of two modes. In the Stand-Alone mode, suitable test equipment, such as a pattern generator and signal analyzer, can be used with the board to evaluate the DAC121C085 performance.

In the Computer mode, data capture and evaluation is simplified by connecting this board to National Semiconductor's Data Capture Board (order number WAVEVSN BRD 4.4). The Data Capture (WV4) Board is connected to a personal computer running WaveVision software through a USB port. The WaveVision4 software runs on Microsoft Windows, and the latest version can be downloaded from the web at http://www.national.com/adc.

Note: WaveVision Software version 4.4 or later is required to evaluate this part with the WV4 Evaluation System.

The WaveVision software allows the user to drive the DAC121C085 with a variety of preset waveforms and custom waveforms. The software also allows the user to configure the I^2C serial Interface.

Data transmitted to the DAC121C085, via the I^2C interface, is converted to an analog waveform by U1, the DAC121C085.

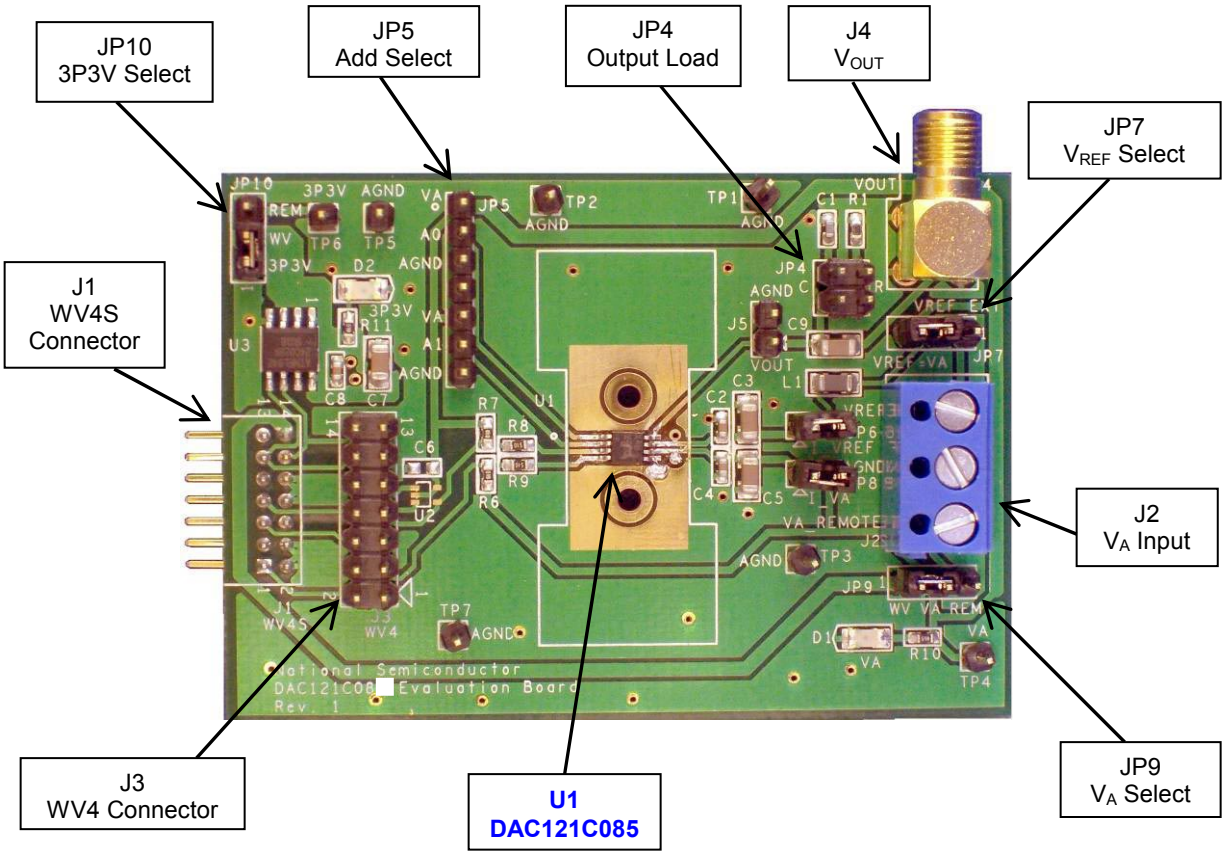

Figure 1: Component and Test Point Locations

2.0 Board Assembly

The DAC121C08XEB evaluation board comes fully assembled and ready for use. Refer to the Bill of Materials for a description of components, to *Figure 1* for major component placement, and to *Figure 12* for the Evaluation Board schematic.

3.0 Quick Start

The evaluation board may be used in the Stand-Alone mode or Computer mode. In Stand-Alone mode, a Pattern Generator is used to interface to the DAC's I^2C Interface. In Computer Mode, a WaveVision4 Board is used to drive the DAC's I^2C interface. In either case, a Signal Analyzer is used to evaluate the analog output signal.

3.1 Stand-Alone Mode

Refer to *Figure 1* for locations of test points and major components.

1. Connect a clean analog (not switching) +5V power source to Power Connector J2 on the DAC121C08XEB board. Ground the middle terminal and connect +5V to the bottom terminal closest to JP9.
2. Make the following required jumper connections, see *Table 1* for more details:
   - **JP9** - pins 2 & 3
   - **JP7** - pins 2 & 3
   - **JP6** - pins 1 & 2
   - **JP8** - pins 1 & 2
3. Turn on the power source.
4. Configure a pattern generator or other I^2C master device to interface to the DAC121C085. Refer to the timing diagrams in the datasheet for further timing details. The DAC supports any of the three standard I^2C speed ranges. Ensure the I^2C master device is configured to drive 5V CMOS logic.
5. Connect the I^2C master device to Serial Interface Header J3 (WV4). Refer to *Figure 2* below for connection details. *NOTE*: The board comes with pull-up resistors (R6 and R7). Any other pull-ups on the I^2C bus must be disabled.

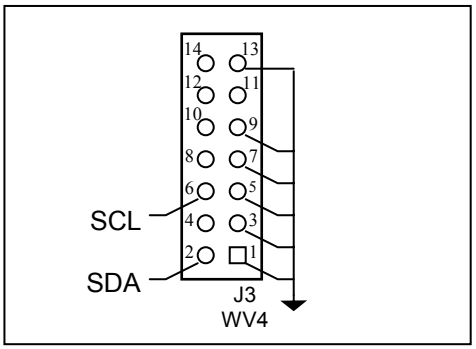

Figure 2: J3 (WV4) Interface Header

6. The Analog Output signal can be seen DC coupled at J5, or AC coupled at SMA connector J4. See the board schematic of *Figure 12* for details.
7. Select the desired output load by adding jumpers to JP4. Connect a jumper across the two left pins near the "C" to add a 200pF load capacitance to ground. Connect a jumper across the two right side pins near the "R" to add a 2kΩ resistive load. See *Table 1* for jumper configurations.
8. The DAC121C085 will respond to I^2C address 0x0C by default with pins A0 and A1 floating. Change the I^2C slave address of the DAC by adding jumpers to JP5. A0 is controlled by pins 1,2, & 3 of JP5. A1 is controlled by pins 5, 6, & 7. Refer to *Table 1* for a detailed description of the I^2C Slave address settings. *NOTE:* Jumper Setting changes to the pin-configurable slave address will not take effect until the DAC is power-cycled.

3.2 Computer Mode

Refer to *Figure 1* for locations of test points and major components. The board comes configured for "plug-and-play" WaveVision evaluation.

1. Run the WaveVision 4 program, version 4.4 or higher is required to interface to the WV4 board. While the program is loading, continue below.
2. Connect a USB cable between the WV4 board and the PC running the WaveVision 4 software.
3. Make the following required jumper connections, see *Table 1* for more details:
   - **JP9** - pins 1 & 2
   - **JP7** - pins 2 & 3
   - **JP6** - pins 1 & 2
   - **JP8** - pins 1 & 2
   - **JP10** - pins 1 & 2
4. Connect the **J1** header on the DAC121C08XEB evaluation board to the WV4 serial connector (**J7**) on the WV4 board. Refer to *Figure 3* for the serial connection and *Figure 4* for the J1 header pin out. *Note*: J1 on the DAC121C08XEB is intentionally stuffed on the bottom side of the board.

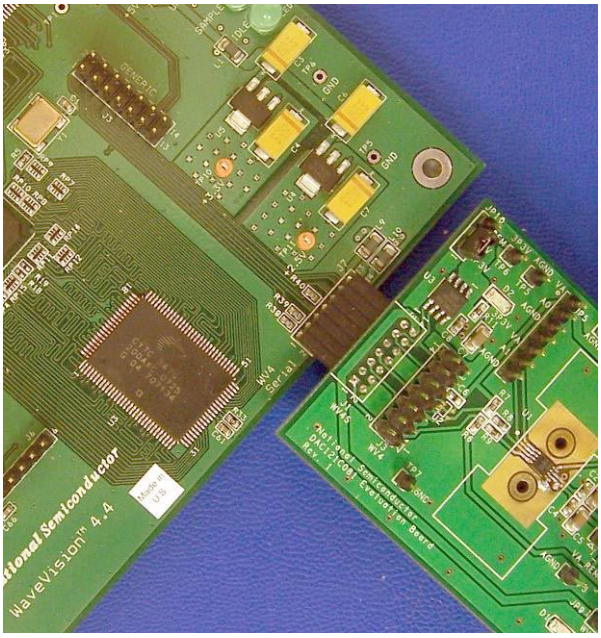

Figure 3: WV4 to DAC121C08XEB Connection

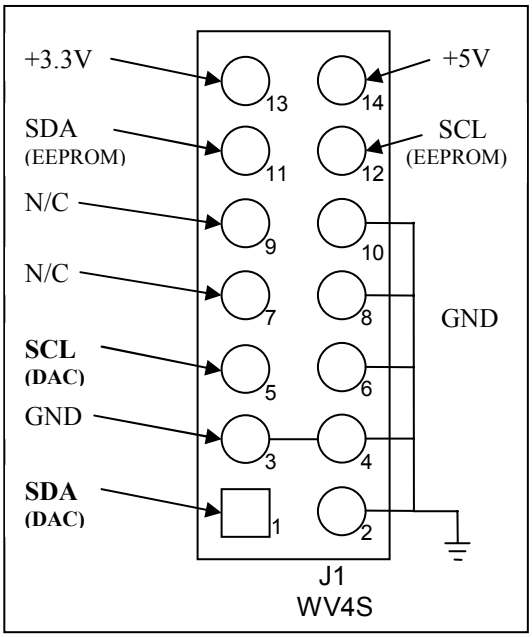

Figure 4: J1 (WV4S) Header

5. Perform step 7 of section 3.1 to configure the loading of the analog output (V_{OUT}).
6. Perform step 8 of section 3.1 to configure the I^2C slave address of the DAC.
7. Connect a clean (not switching) +5.0V power source with a 350mA current limit to power connector **J1** on the WV4 board. Turn on the power supply.
8. Refer to *Section 5.0* on Software Operation and Settings to setup the WaveVision 4 software.

4.0 Functional Description

4.1 Jumper Settings

Table 1 describes the function of the various jumpers on the DAC121C08XEB evaluation board. The evaluation board schematic is shown in *Figure 12*.

Jumper	Pins 1 & 2	Pins 2 & 3
JP4	V_{OUT} Load Select *(See Below)*	
JP5	I^2C Address Select *(See Below)*	
JP6	Enable V_{REF} supply to the DAC.	
JP7	Use external V_{REF} from J2.	Set $V_{REF} = V_A$
JP8	Enable V_A supply to the DAC.	
JP9	Use V_A from the WV4 board	Use external V_A from J2.
JP10	Use 3.3V supply from the WV4 board	Use external 3.3V supply from TP6.
	Jumper JP4 (V_{OUT} Load Select)	
Left side pins near "C"	Connect a 200pF load capacitance from V_{OUT} to GND	
Right side pins near "R"	Connect a 2kΩ load resistance from V_{OUT} to GND	
Address	**Jumper JP5** (I^2C Address Select)	
0x0C	No jumpers	
0x0D	Short pins 2 & 3.	
0x0E	Short pins 1 & 2.	
0x08	Short pins 6 & 7.	
0x09	Short pins 2 & 3 and pins 6 & 7.	
0x0A	Short pins 1 & 2 and pins 6 & 7.	
0x4C	Short pins 5 & 6.	
0x4D	Short pins 2 & 3 and pins 5 & 6.	
0x4E	Short pins 1 & 2 and pins 5 & 6.	

Table 1: Jumper Configurations

4.2 I^2C Interface

The DAC supports all three I^2C speeds, including Hs-Mode (3.4MHz). In Hs-Mode the maximum DAC conversion rate is 188.9kHz. The board is designed with 1kΩ I^2C pull-up resistors on both the SDA and SCL lines (R6 & R7). Also, series resistors for SCL and SDA are designed into the board (R8 & R9). The board is shipped with 51Ω series resistors which can be increased to interface to a noisy I^2C bus.

In Computer Mode, the I^2C interface is driven by the WaveVision4 board. The WaveVision4 software allows the user to drive the DAC121C085 with various digitized signals. Refer to *Section 5.0* "Software Operation and Settings" for further information.

In Stand-Alone Mode, the I^2C interface must be driven by an external device. See section 1.4.5 of the DAC121C081/DAC121C085 datasheet for a typical write sequence timing diagram.

The maximum digital input level of the I^2C interface depends on the analog supply voltage (V_A). The interface operates at normal CMOS logic levels. See the Electrical Characteristics section of the datasheet for further details.

The SDA signal is accessible by connecting to pin 2 of the WV4 connector (J3). The SCL signal is accessible by connecting to pin 6 of J3.

Please refer to section 1.4 of the datasheet for a detailed description of the I^2C interface. Refer to the Philips I2C Specification for further details.

4.3 DAC Reference Circuitry

The reference voltage for the DAC121C085 is selected by JP7. (See *Table 1* for details.) The reference can either be selected as the V_A supply or an externally supplied voltage (J2). The analog output range of the DAC121C085 can be scaled by adjusting the reference voltage (V_{REF}). The lower the V_{REF}, the smaller the output range. V_{REF} can be set anywhere from 1.0V to V_A. V_A is independent of V_{REF} and can be set anywhere from +2.7V to +5.5V. In any case, V_{REF} has little to no PSRR and must be as clean as possible to reduce noise feedthrough on V_{OUT}.

4.4 Analog Output

The analog output of this Eval board is available in two places. For a DC coupled output, pin 1 of J5 provides V_{OUT} and pin 2 provides AGND. An AC coupled output is provided by the SMA connector (J4). See *Figure 5* below for details.

If using a spectrum analyzer to look at the output of the DAC, the AC coupled output (J4) is recommended.

For very low frequency (i.e. less than 1kHz), use J5 to see the output signal DC coupled. For an AC coupled output at low frequencies, simply replace the AC coupling capacitor at C9 with a larger capacitor. Use the J4 SMA to look at the AC coupled output.

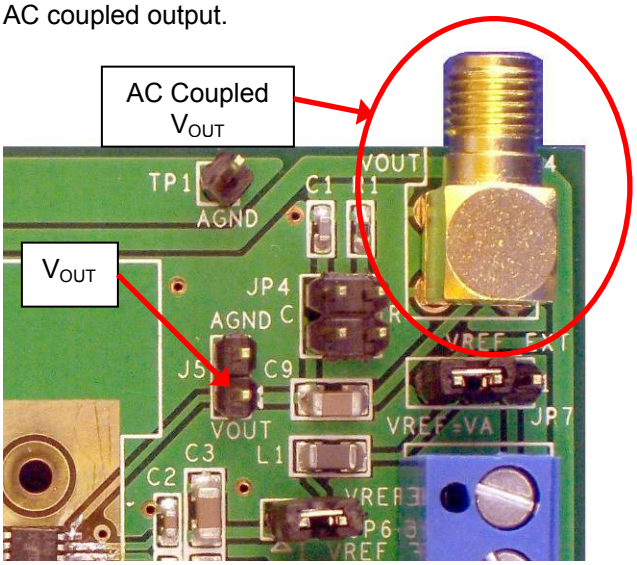

Figure 5: Analog Output

4.5 Power Supply Connections

In Computer mode, the board can be powered by either an external supply or the local WaveVision4 board supply. In Stand-alone mode, the Evaluation Board must be powered by an external supply.

If you wish to use the local supply from the WaveVision4 Board, place a jumper across pins 1 and 2 of JP9. This connection will supply +5V to V_A on the DAC board. To set V_{REF}=V_A, simply short pins 2 & 3 of JP7. For WaveVision to recognize the board, the 3P3V supply must be enabled as well. Do this by placing a jumper across pins 1 and 2 of JP10. The board comes configured to use the local supply. The default jumper settings are shown in *Figure 1.*

If you wish to supply V_A externally, connect a DC voltage supply to connector J2. Connect GND to the center terminal and V_A to the bottom terminal. Place a jumper across pins 2 and 3 of JP9 to select V_A_REMOTE. This voltage (V_A) can be set anywhere from +2.7V to +5.5V. The source of V_{REF} is controlled by the JP7 jumper. To set V_{REF}=V_A, short pins 2 & 3. To use an external V_{REF} from the top terminal of J2, short pins 1 & 2. Refer to *Figure 6* for a diagram of the power supply connections.

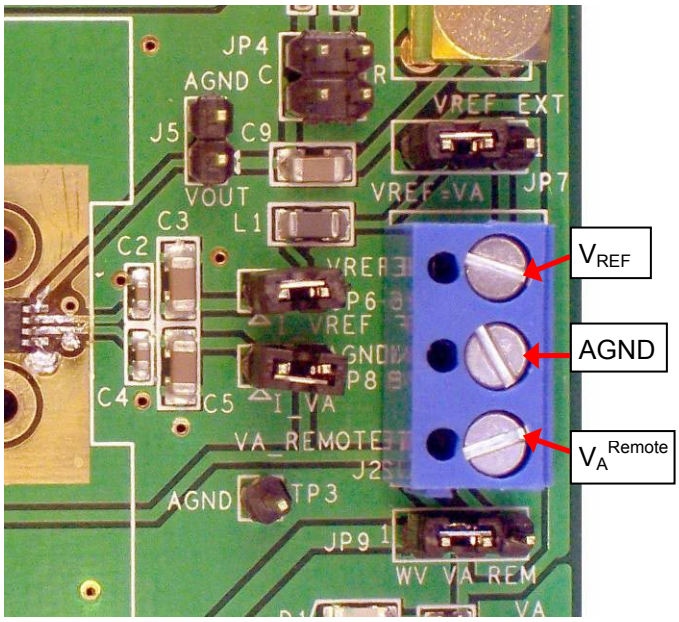

Figure 6: Power Supply Connections

Typical supply currents when applying an external supply to V_A and V_{REF} are as follows:

- **For V_A = +3.3V, I = 7mA**
- **For V_A = +5.0V, I = 12mA**

Note: These values are specified for a continuously operating DAC in High Speed Mode, driving a full-scale sinewave output. The majority of this current is for powering devices external to the DAC121C085 such as the pull-up resistors and the LED.

5.0 Software Operation and Settings

The WaveVision4 software is included with the WaveVision4 board and the latest version can be downloaded from National's web site at http://www.national.com/adc. WaveVision4 software version 4.4 or later is required to evaluate this device with the WV4 system.

To install this software, follow the procedure in the WaveVision4 Board User's Guide. Once the software is installed, run it and set it up as follows:

Note: Before continuing, ensure that the WaveVision Hardware is setup according to Section 3.2.

1. From the WaveVision main menu, go to Settings, then Capture Settings to open the System Settings dialog.
2. Under board type, select WaveVision4 (USB).
3. Turn on the power to both boards, then click on the **"Reset"** button and await the firmware download. *After the firmware has downloaded, WaveVision will open up a control panel window for the DAC121C08XEB*.
4. Click on the **"Close"** button to close the System Settings Dialog.
5. Navigate to the DAC121C08XEB Evaluation Board window.
6. Configure the I^2C Interface speed as seen in *Figure 7*. Standard mode, Fast Mode, and High Speed mode are supported.

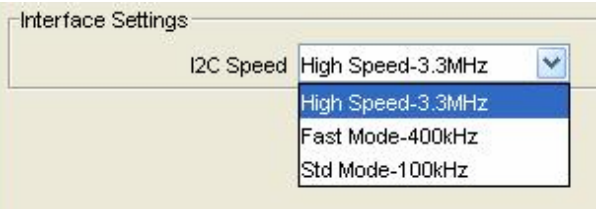

Figure 7: I^2C Speed Select

7. Configure the I^2C address of the DAC. The DAC121C085 will respond to I^2C address 0x0C by default with pins A0 and A1 floating (no jumpers on JP5). Change the I^2C slave address of the DAC by adding jumpers to JP5. Refer to *Table 1* for a detailed description of the I^2C address settings. The address in *Figure 8* must match the address configured by A0 and A1.
   NOTE: Jumper Setting changes to the pin-configured slave address will not take effect until the DAC is power-cycled.

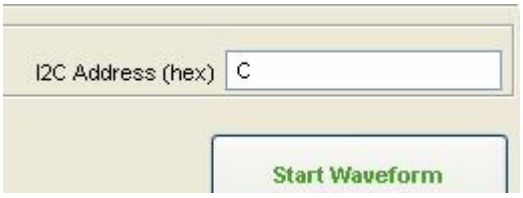

Figure 8: I^2C Address

8. Perform register level control of the DAC by writing 16-bit words to the DAC Data Register. To write the DAC, simply type a 16-bit hex value into the "Manual DAC Control" field and press Enter or click the "Write DAC Register" button. See *Figure 9*.

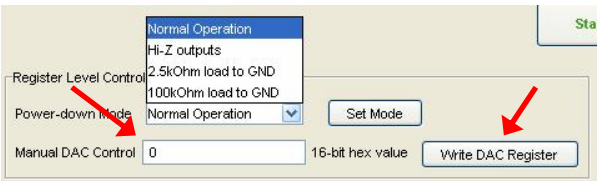

Figure 9: Manual DAC Control

9. To put the DAC into power-down mode, select a power-down option from the "Power-down Mode" box and click the "Set Mode" button.

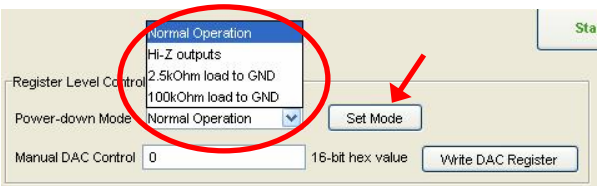

Figure 10: DAC Power-down Control

10. Configure the digital waveform to be converted by the DAC as seen in *Figure 11*. *Please see the WaveVision4 User's Manual for detailed instructions. The ability to drive preset waveforms or custom data is provided.*

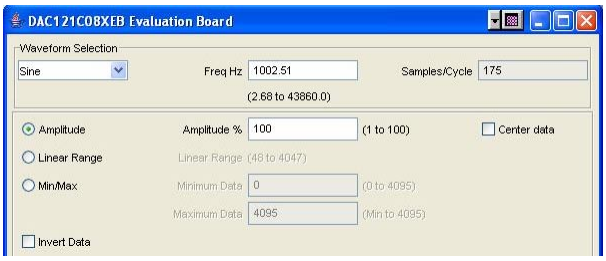

Figure 11: Waveform Configuration

11. Press the **"Start"** button to begin driving the digital waveform to the DAC.

The WaveVision4 Board will continuously send the waveform out to the DAC over the I^2C interface until the **"Stop"** button is pressed. Please refer to S*ection 4.4* for details on measuring the Analog Output of the DAC.

The Digital Waveform is plotted in the main WaveVision window for added convienience. This waveform may be further analyzed by clicking on the magnifying glass icon, then clicking and dragging across a specific area of the plot for better data inspection. See the WaveVision4 Board User's Guide for details.

If this board is used in conjunction with the WaveVision4 Data Capture Board and WaveVision software, a USB cable is needed to connect WaveVision4 Board to the host computer. See the WaveVision4 Board User's Guide for details.

6.0 Evaluation Board Specifications

Board Size:	2.8" x 2.0" (7.2 cm x 5.1 cm)	
Power Requirements	Min: +2.7V , 6mA	Max: +5.5V, 16mA
I^2C Interface Speed:	100 kHz, 400kHz, or 3.4 MHz	
Analog Output		
AC Coupled Output Range:	$-(V_A/2)$ to $(V_A/2)$	
Impedance:	User Selectable: 2KΩ, 200pF, or ∞.	

7.0 Hardware Schematic

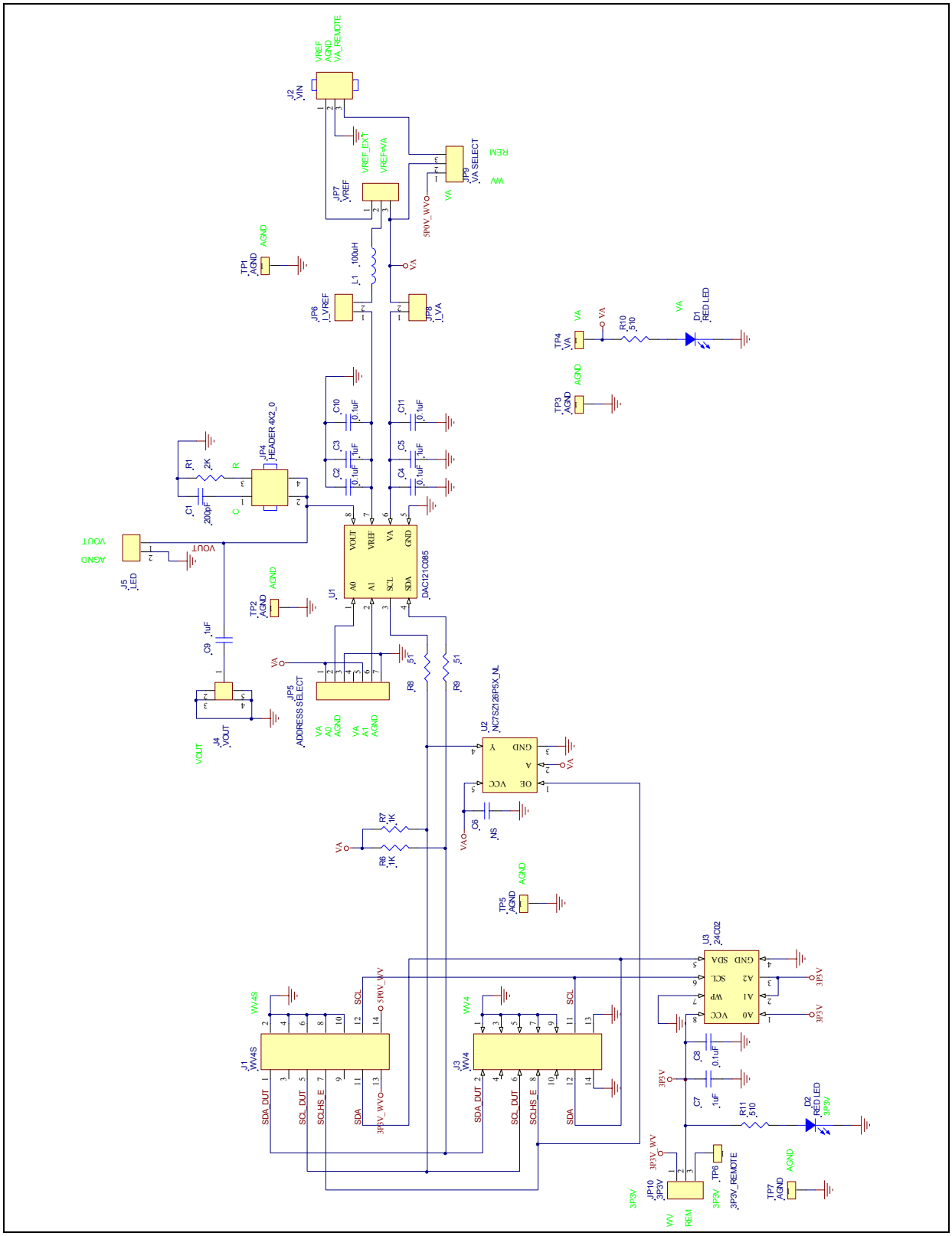

Figure 12: DAC121C08XEB Evaluation Board Schematic

8.0 Evaluation Board Bill of Materials

Quantity	Reference	PCB Footprint	Source	Source Part #	Rating	Value
1	C1	rc0603			10V	200pF
6	C2,C4,C6,C8,C10,C11	rc0603			10V	0.1uF
4	C3,C5,C7,C9	c1206			10V	1uF
2	D1,D2	D1206-21	Digikey	516-1440-1-ND		RED LED
1	JP4	hdr2x2				HEADER 4X2_0
1	JP5	hdr1x7	Digikey	S1011E-36-ND		ADDRESS SELECT
1	JP6	hdr1x2	Digikey	S1011E-36-ND		I_VREF
1	JP7	hdr1x3	Digikey	S1011E-36-ND		VREF
1	JP8	hdr1x2	Digikey	S1011E-36-ND		I_VA
1	JP9	hdr1x3	Digikey	S1011E-36-ND		VA SELECT
1	JP10	hdr1x3	Digikey	S1011E-36-ND		3P3V
1	J1	hdr2x7_2mm-rh	Digikey	S5803-21-ND		WV4S
1	J2	ED120-3	Digikey	ED1609-ND		VIN
1	J3	berg2x7p	Digikey	A26529-40-ND		WV4
1	J4	SMA				VOUT
1	J5	hdr1x2	Digikey	S1011E-36-ND		LED
1	L1	1206	Digikey	445-1543-1-ND		100uH
1	R1	rc0603				2K
2	R6,R7	rc0603				1K
2	R10,R11	rc0603				510
2	R8,R9	rc0603				51
5	TP1,TP2,TP3,TP5,TP7	tp_60c40dp	Digikey	S1011E-36-ND		AGND
1	TP4	tp_60c40dp	Digikey	S1011E-36-ND		VA
1	TP6	tp_60c40dp	Digikey	S1011E-36-ND		3P3V_REMOTE
1	U1	mso8SD-8				DAC121C085
1	U2	sc70-5				NS
1	U3	so8				24C02

APPENDIX

A1.0 Summary Tables of Test Points, Jumpers, and Connectors

Test Points on the DAC121C08XEB Evaluation Board

TP1: AGND	Ground. Located at the top center of the board.
TP2: AGND	Ground. Located at the top center of the board.
TP3: AGND	Ground. Located at the bottom right of the board.
TP4: VA	V_A Test Point. Located at the bottom right of the board.
TP5: AGND	Ground. Located at the top left of the board.
TP6: 3P3V	3.3V test point. Located at the top left of the board.
TP7: AGND	Ground. Located at the bottom left of the board.

Connectors on the DAC121C08XEB Evaluation Board

J1: WV4S Header	Wave Vision 4 Serial connector. Stuffed on the bottom side of the board intentionally.
J2: Terminal Block	VREF, AGND, VA_REMOTE. External power supply connector.
J3: Serial Interface Header	Serial Interface header. Logic Input. (Refer to *Figure 2* for a pin-out diagram.)
J4: SMA Connector	VOUT_AC. AC Coupled Analog Output.
J5: 2-pin Header	VOUT. DC Coupled Analog Output.

Selection Jumpers on the DAC121C08XEB Evaluation Board (Refer to *Table 1* in Section 4.0 for configuration details)

JP4: V_{OUT} Load Select	Configures the load on V_{OUT}. Refer to *Table 1*.
JP5: I^2C Address Select	Configures the DAC's I^2C address. Refer to *Table 1*. Note: Changes to the pin-configured I^2C slave address do not take effect until the DAC is power-cycled.
JP6: I_VREF	Enables V_{REF} supply to the DAC. Also used to measure isolated V_{REF} current.
JP7: V_{REF} Select	Selects the V_{REF} source. V_{REF} is either supplied externally or connected to V_A by this jumper.
JP8: I_VA	Enables V_A supply to the DAC. Also used to measure isolated V_A current.
JP9: V_A Select	Selects the V_{REF} source. V_{REF} is either supplied externally or connected to V_A by this jumper.
JP10: 3P3V Select	Selects the 3.3V source for powering the WaveVision EEPROM (U3). Always set to pins 1 and 2 for WaveVision operation.

[Blank Page]

BY USING THIS PRODUCT, YOU ARE AGREEING TO BE BOUND BY THE TERMS AND CONDITIONS OF NATIONAL SEMICONDUCTOR'S END USER LICENSE AGREEMENT. DO NOT USE THIS PRODUCT UNTIL YOU HAVE READ AND AGREED TO THE TERMS AND CONDITIONS OF THAT AGREEMENT. IF YOU DO NOT AGREE WITH THEM, CONTACT THE VENDOR WITHIN TEN (10) DAYS OF RECEIPT FOR INSTRUCTIONS ON RETURN OF THE UNUSED PRODUCT FOR A REFUND OF THE PURCHASE PRICE PAID, IF ANY.

The DAC121C08XEB, DAC101C08XEB, & DAC081C08XEB Evaluation Boards are intended for product evaluation purposes only and are not intended for resale to end consumers, are not authorized for such use and are not designed for compliance with European EMC Directive 89/336/EEC, or for compliance with any other electromagnetic compatibility requirements.

National Semiconductor Corporation does not assume any responsibility for use of any circuitry or software supplied or described. No circuit patent licenses are implied.

LIFE SUPPORT POLICY

NATIONAL'S PRODUCTS ARE NOT AUTHORIZED FOR USE AS CRITICAL COMPONENTS IN LIFE SUPPORT DEVICES OR SYSTEMS WITHOUT THE EXPRESS WRITTEN APPROVAL OF THE PRESIDENT OF NATIONAL SEMICONDUCTOR CORPORATION. As used herein:

1. Life support devices or systems are devices or systems which, (a) are intended for surgical implant into the body, or (b) support or sustain life, and whose failure to perform, when properly used in accordance with instructions for use provided in the labeling, can be reasonably expected to result in a significant injury to the user.
2. A critical component is any component in a life support device or system whose failure to perform can be reasonably expected to cause the failure of the life support device or system, or to affect its safety or effectiveness.

National Semiconductor Corporation Americas	National Semiconductor Europe	National Semiconductor Asia Pacific Customer Response Group	National Semiconductor Japan Ltd.
Tel: 1-800-272-9959 Fax: 1-800-737-7018 Email: support@nsc.com	Fax: +49 (0) 1 80-530 85 86 Email: europe.support@nsc.com Deutsch Tel: +49 (0) 699508 6208 English Tel: +49 (0) 870 24 0 2171 Français Tel: +49 (0) 141 91 8790	Tel: 65-2544466 Fax: 65-2504466 Email:sea.support@nsc.com	Tel: 81-3-5639-7560 Fax: 81-3-5639-7507
www.national.com			

National does not assume any responsibility for any circuitry described, no circuit patent licenses are implied and National reserves the right at any time without notice to change said circuitry and specifications.